Big Green Egg

The Ultimate Cooking Experience

XXL XL L M S MX MN

EGG® and Band Assembly Instructions

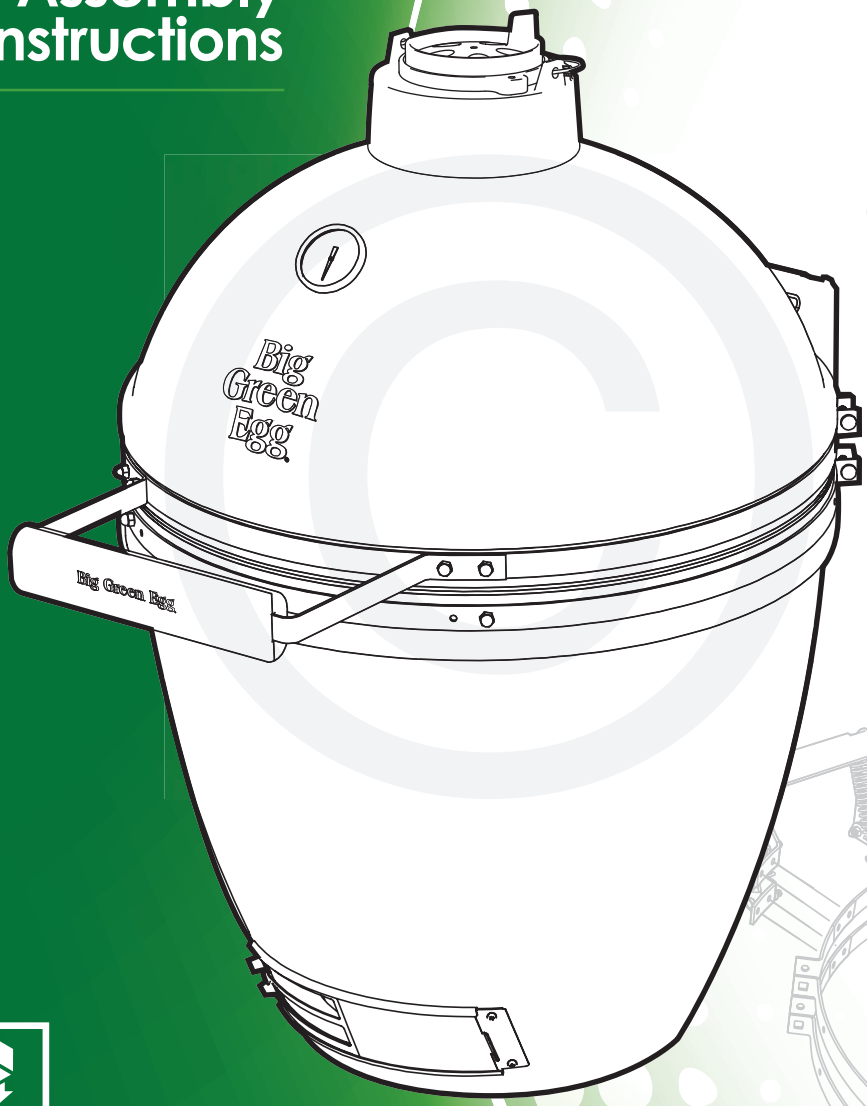

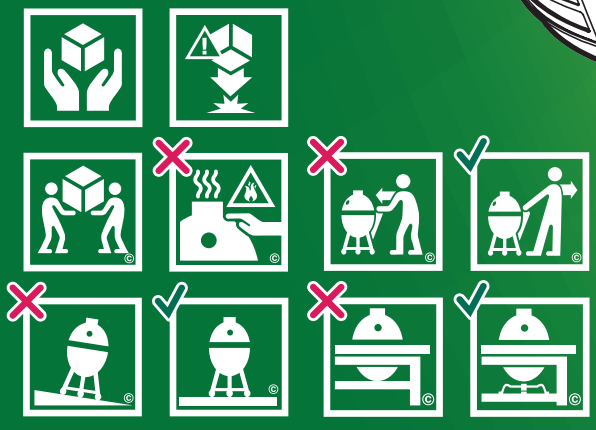

© COPYRIGHT BIG GREEN EGG INC.

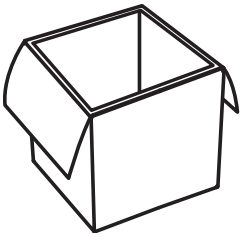

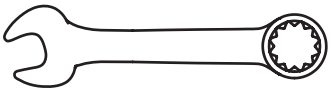

7/16″ + 1/2″
(Nr. 11 + 13)

www.biggreenegg.com/
assembly-videos

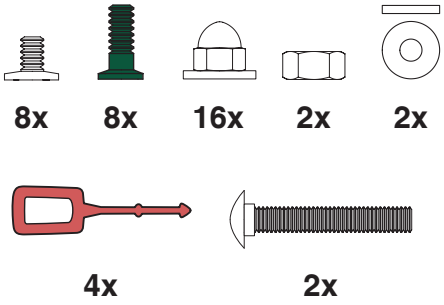

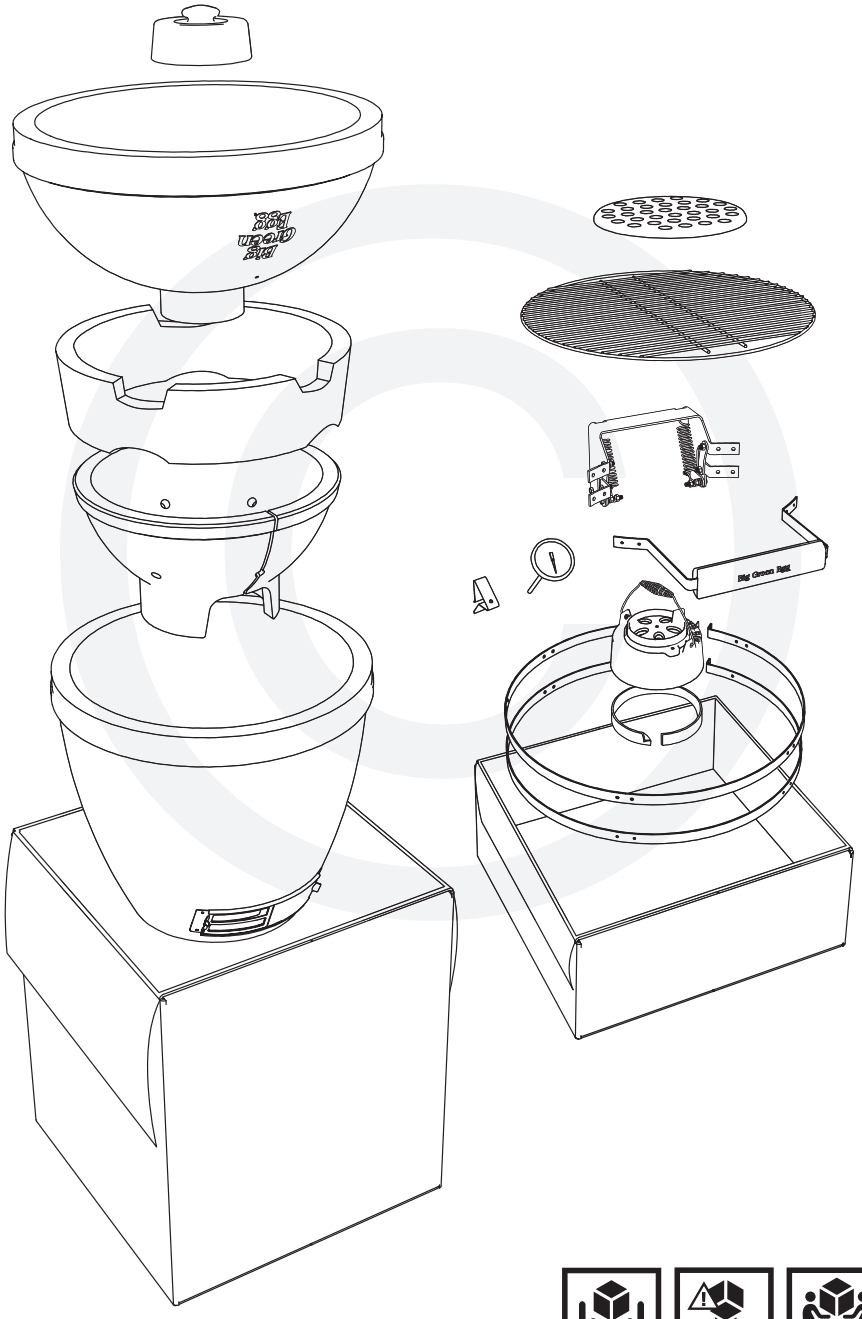

www.biggreenegg.com
www.biggreenegg.ca
www.biggreenegg.eu
www.biggreenegg.co.uk
www.biggreenegg.co.za

CAUTION: SEE SAFETY NOTICE
www.biggreenegg.com/safetytips

© COPYRIGHT BIG GREEN EGG INC.

© Big Green Egg, Inc. All Rights Reserved Worldwide. No part of this document may be reproduced or transmitted in any form or by any means, digital, electronic, mechanical, photocopying, recording, or otherwise, without the prior written permission of Big Green Egg, Inc (BGE). All images and materials are protected by © copyright and all rights are reserved in any medium and any form of reproduction worldwide. Any use of these materials, including reproduction, modification, distribution or republication, without the prior written consent of Big Green Egg, is strictly prohibited. Big Green Egg ®, including the Big Green Egg logo, are trademarks and/or registered trademarks of BGE in the USA and other countries throughout the world. All Rights are Reserved Worldwide. Warning: The unauthorized reproduction or distribution of this copyrighted work is illegal. Criminal copyright infringement, including infringement without monetary gain, is investigated by the FBI and is punishable by up to five years in federal prison and a fine of $250,000.

1

A 8x 8x

B 4x 4x

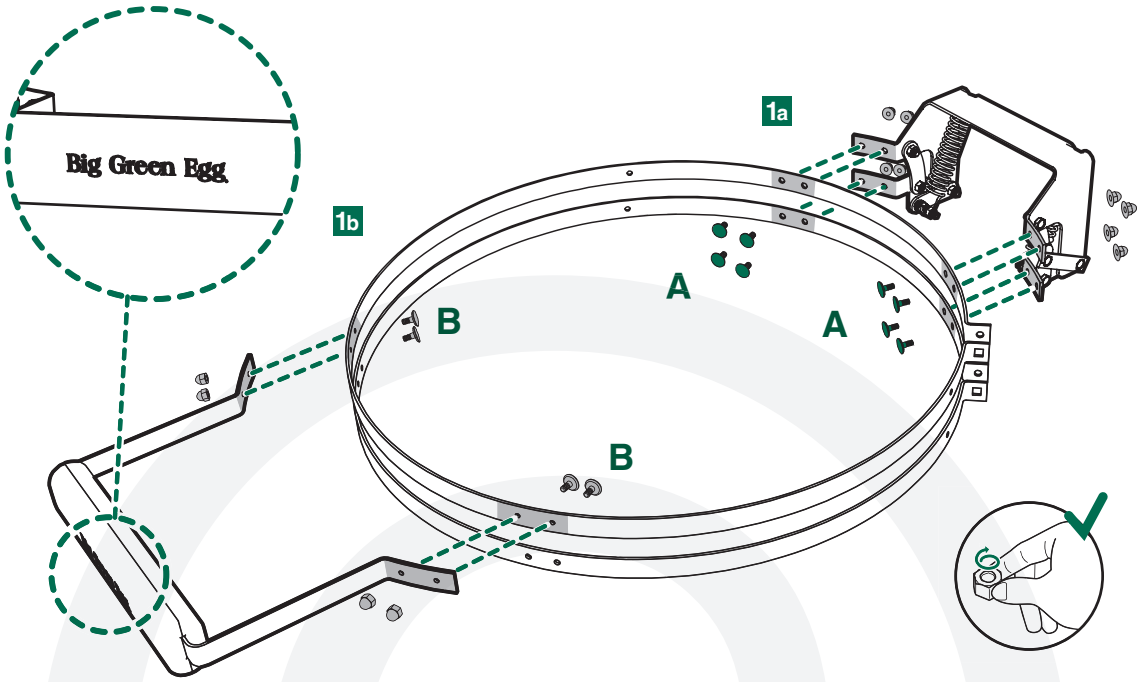

© COPYRIGHT BIG GREEN EGG INC.

2

4x 4x

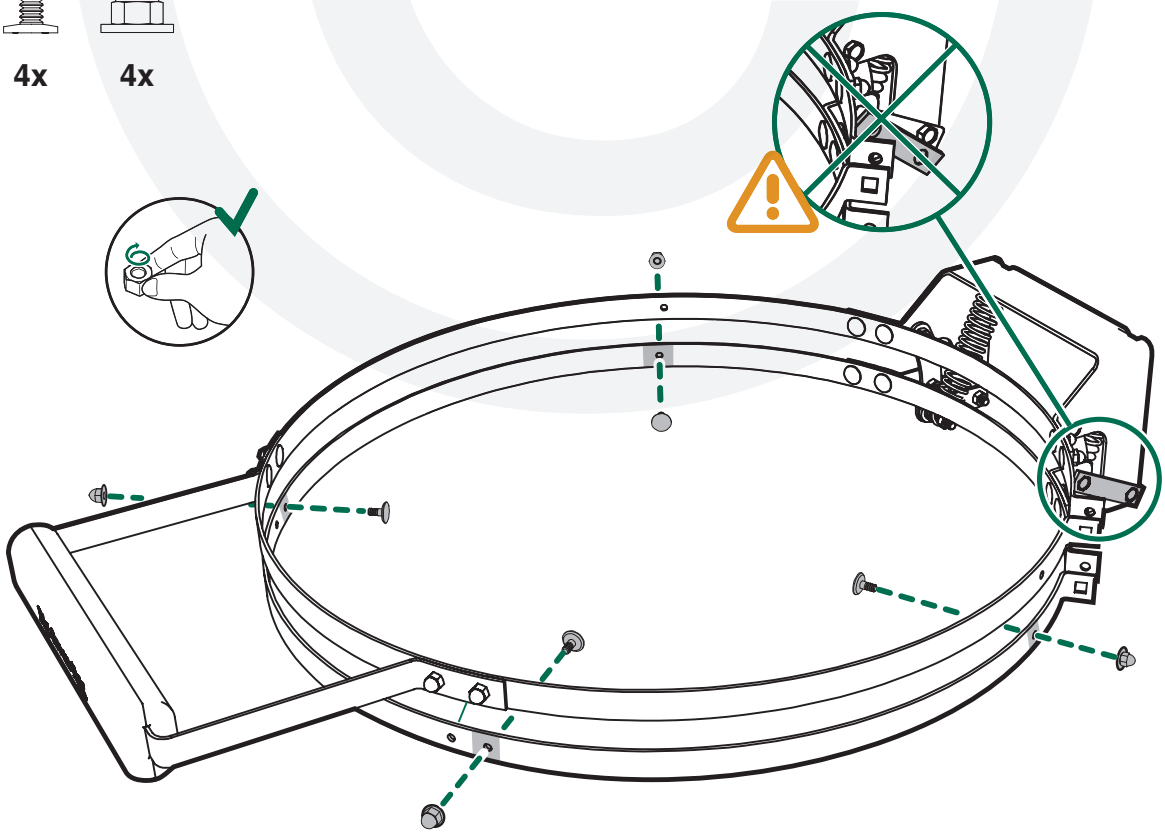

© COPYRIGHT BIG GREEN EGG INC.

3

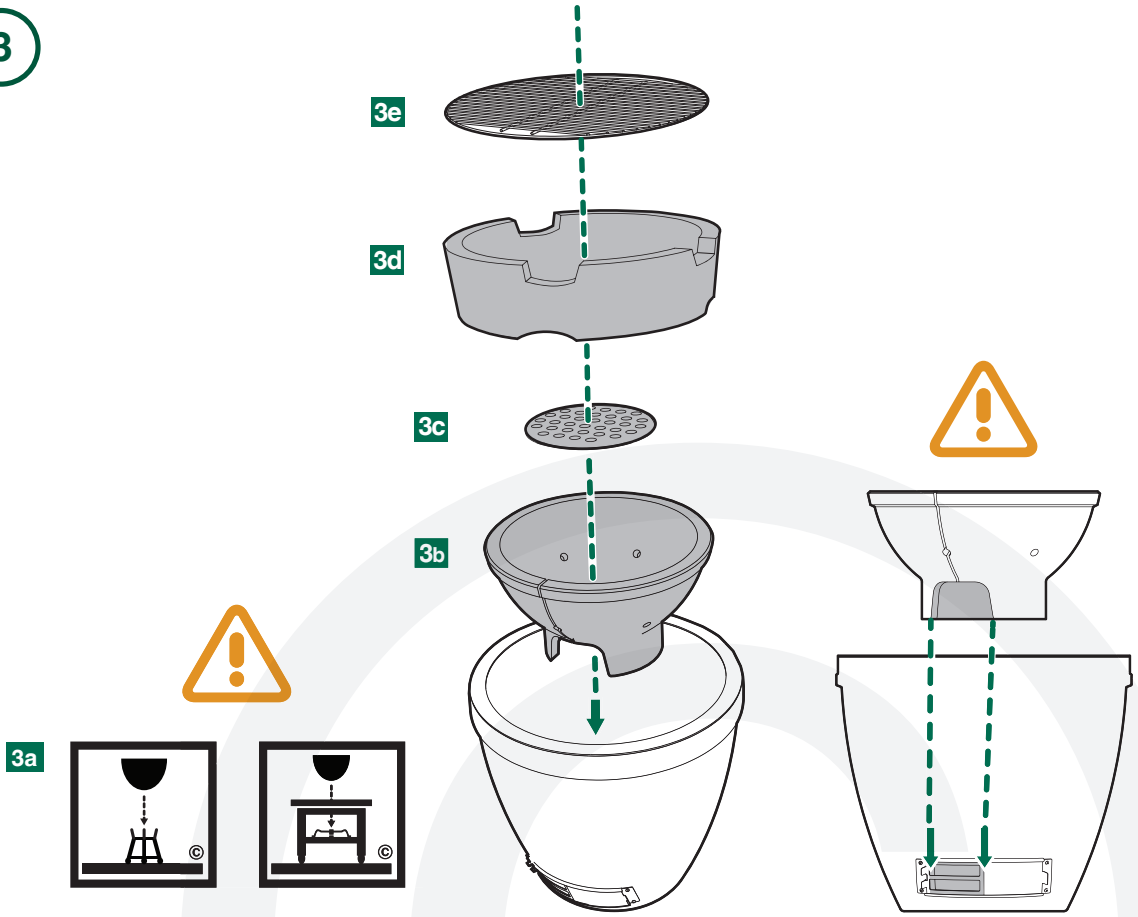

© COPYRIGHT BIG GREEN EGG INC.

4

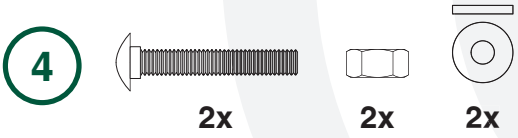

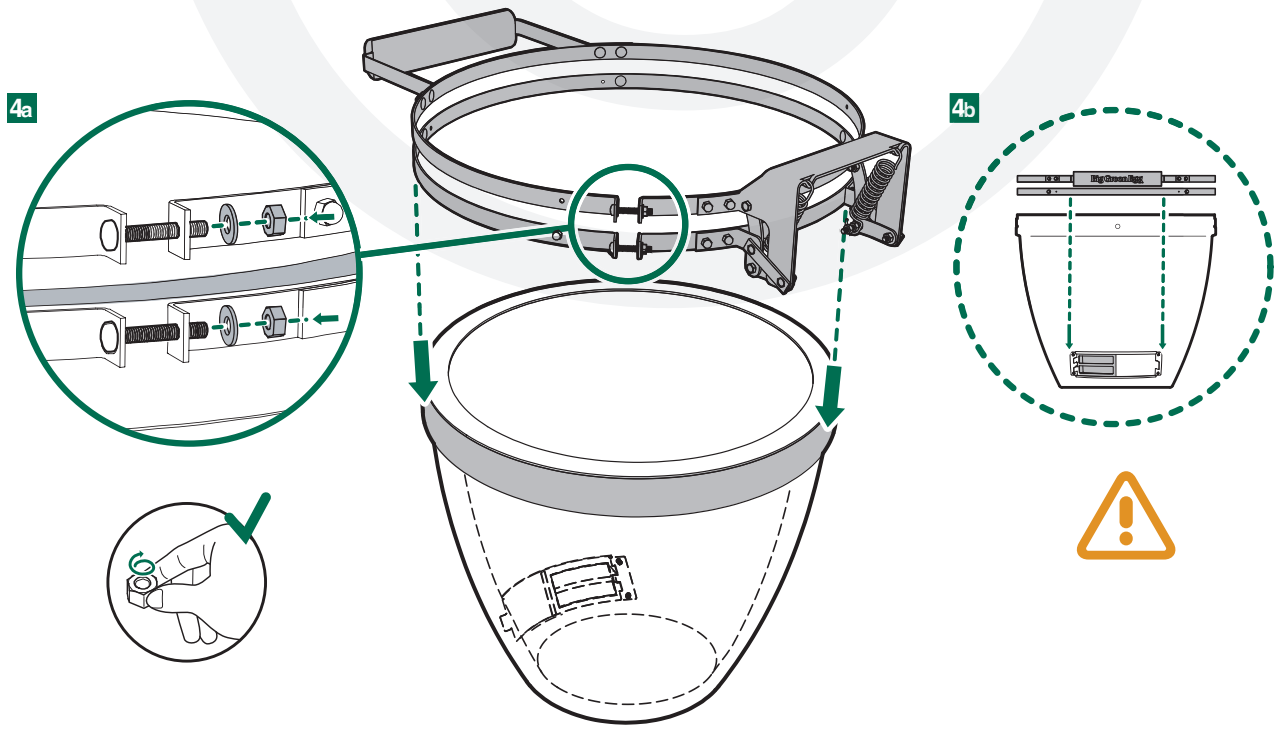

© COPYRIGHT BIG GREEN EGG INC.

5

4x

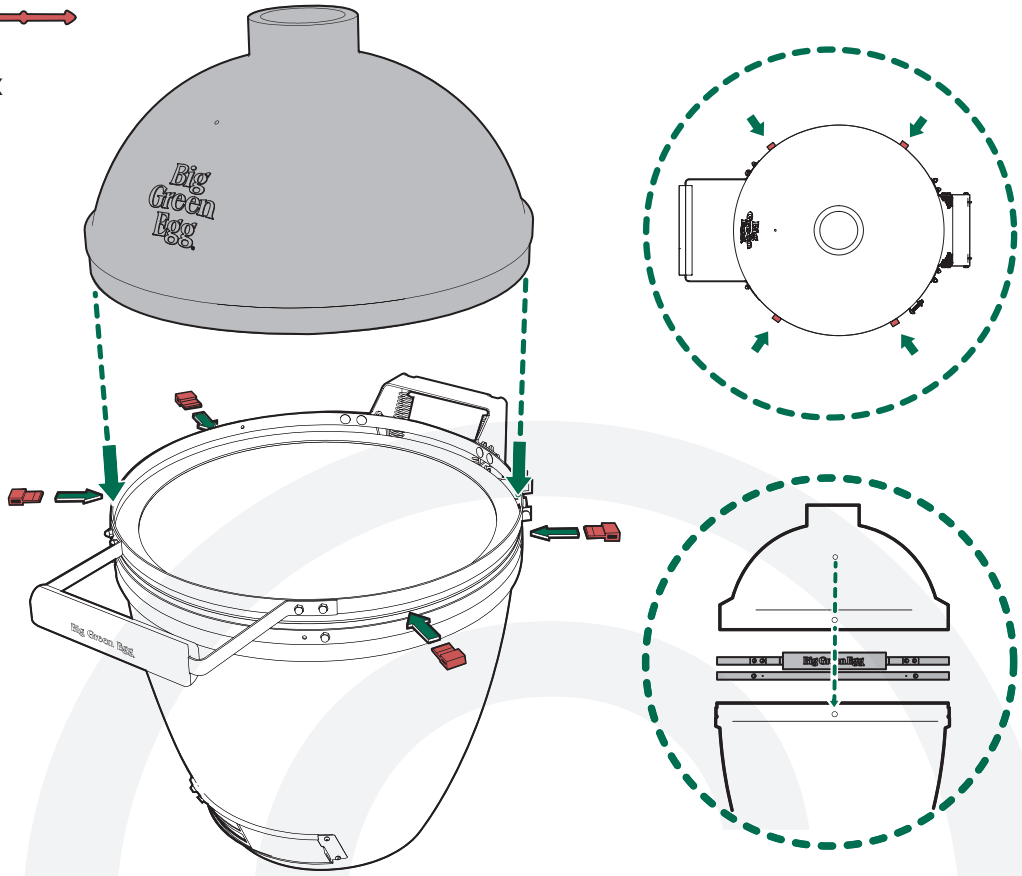

© COPYRIGHT BIG GREEN EGG INC.

6

1/2″ (Nr. 13)

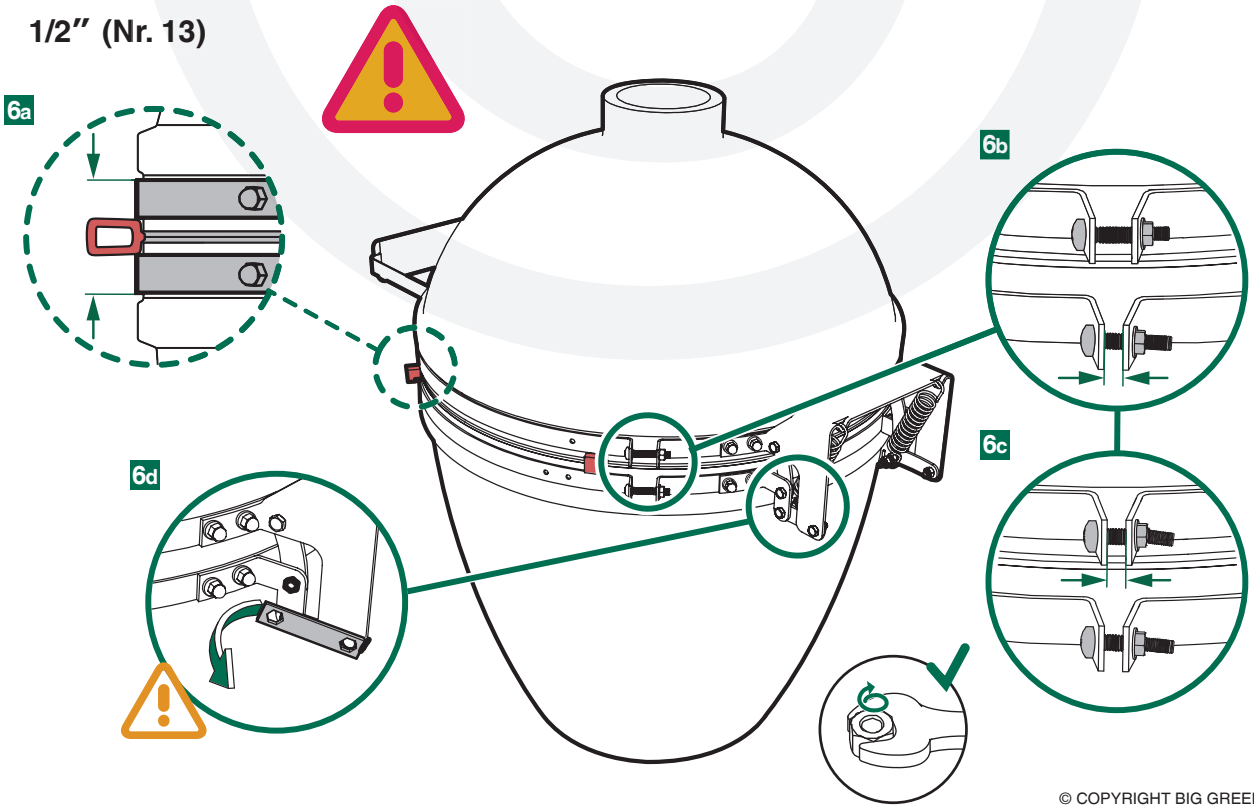

© COPYRIGHT BIG GREEN EGG INC.

7

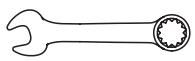

1/2″ (Nr. 13)
7/16″ (Nr. 11)

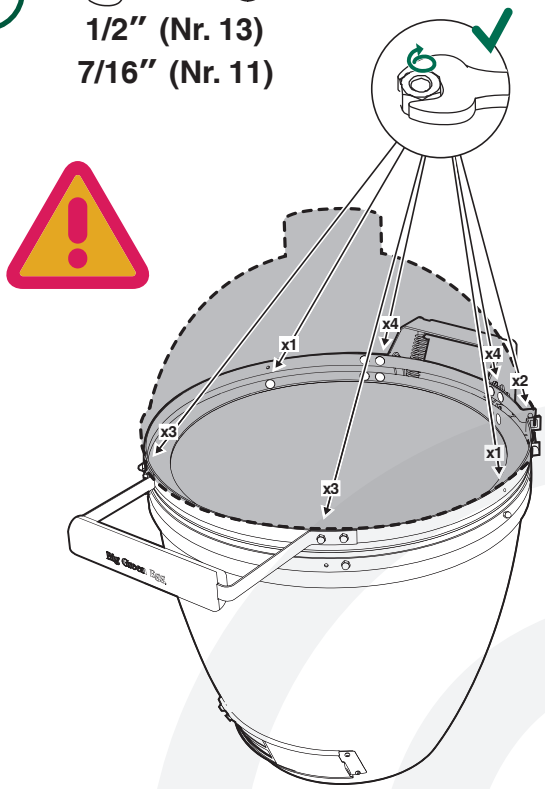

© COPYRIGHT BIG GREEN EGG INC.

8

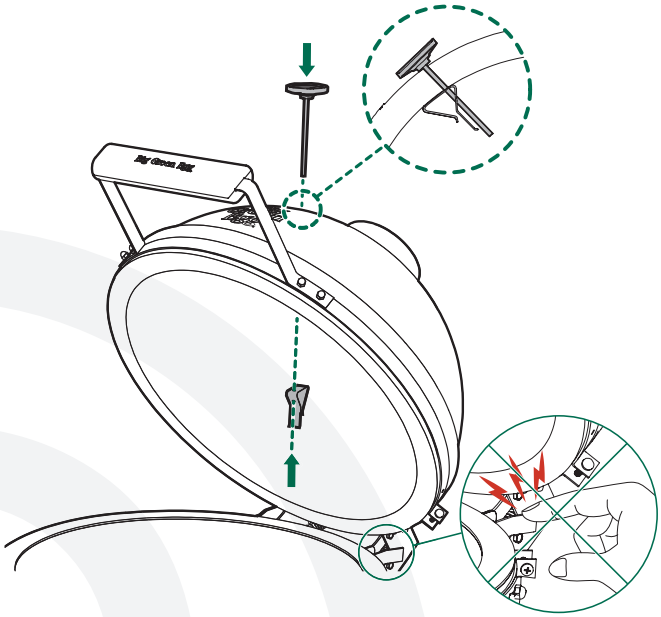

© COPYRIGHT BIG GREEN EGG INC.

9

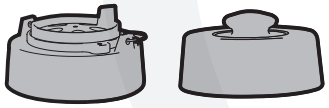

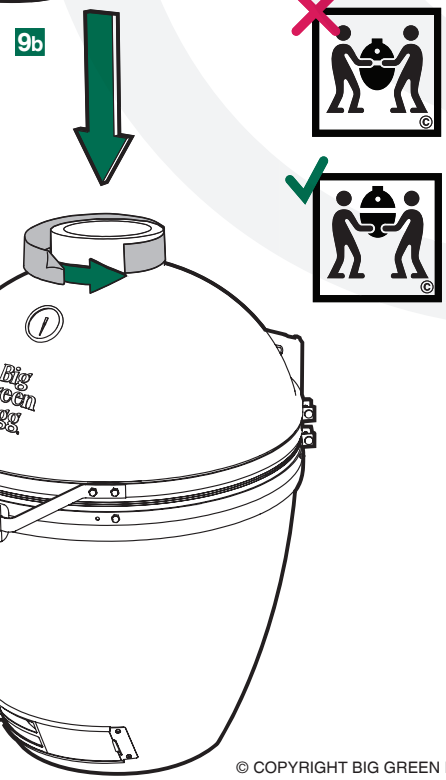

© COPYRIGHT BIG GREEN EGG INC.

10

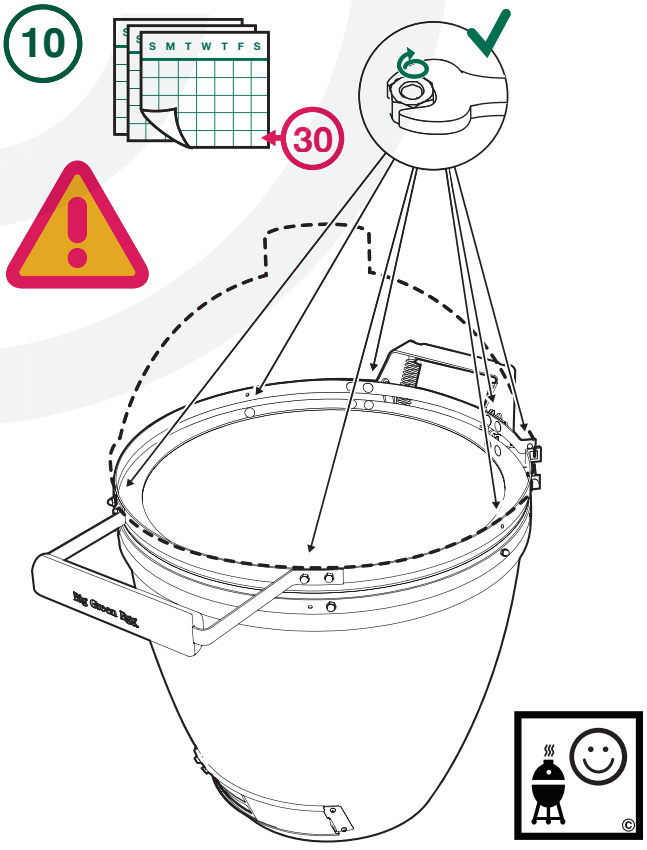

© COPYRIGHT BIG GREEN EGG INC.